SYCAMORE

SY9122 Luma Halo Tunable LED Mirror
Instruction Leaflet

Thank you for purchasing this Sycamore Lighting product.

Please make sure instructions are followed carefully prior to and during installation and product is not altered, otherwise warranty may not be valid. For technical support or warranty information please visit www.sycamoreLED.com, or call our dedicated technical helpline +44 (0) 113 2866686.

IMPORTANT - Please read prior to installation

1. Please read these instructions carefully before commencing any work
2. Please retain these instructions for future reference
3. This unit must be installed by a qualified electrician in accordance with the IEE wiring regulations and building regulations
4. To prevent electrocution switch the power off at the mains supply before installing or maintaining this fitting
5. Ensure others cannot restore the electrical supply without your knowledge

CONTENTS AND TOOLS REQUIRED

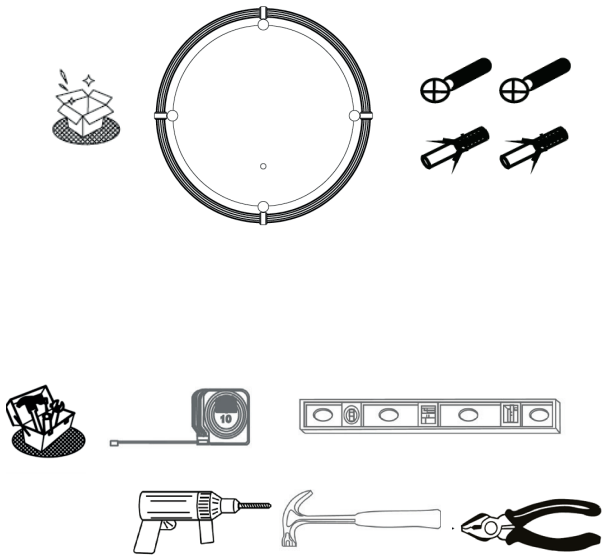

BATHROOM REGULATIONS

This product is rated IP44 and is suitable for installation in Zone 1, 2 & Outside Zones

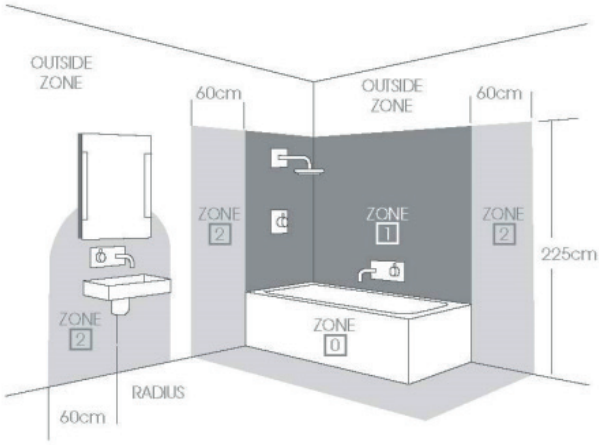

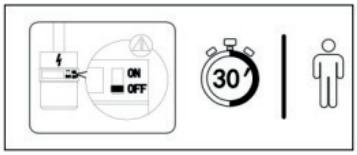

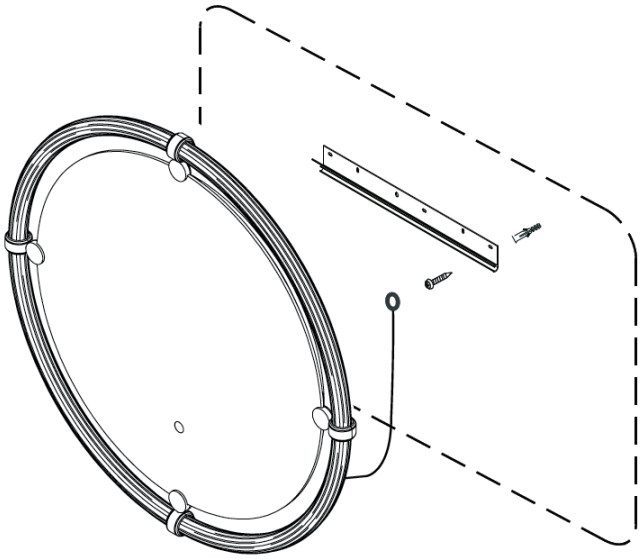

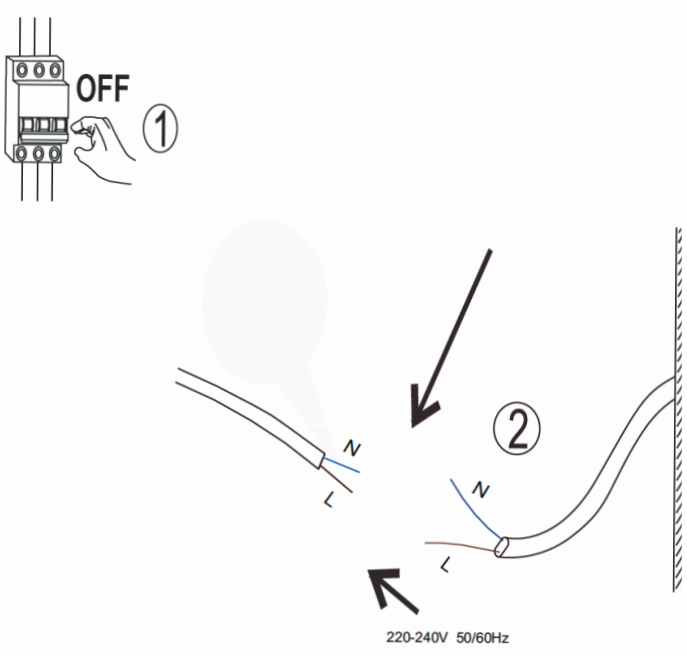

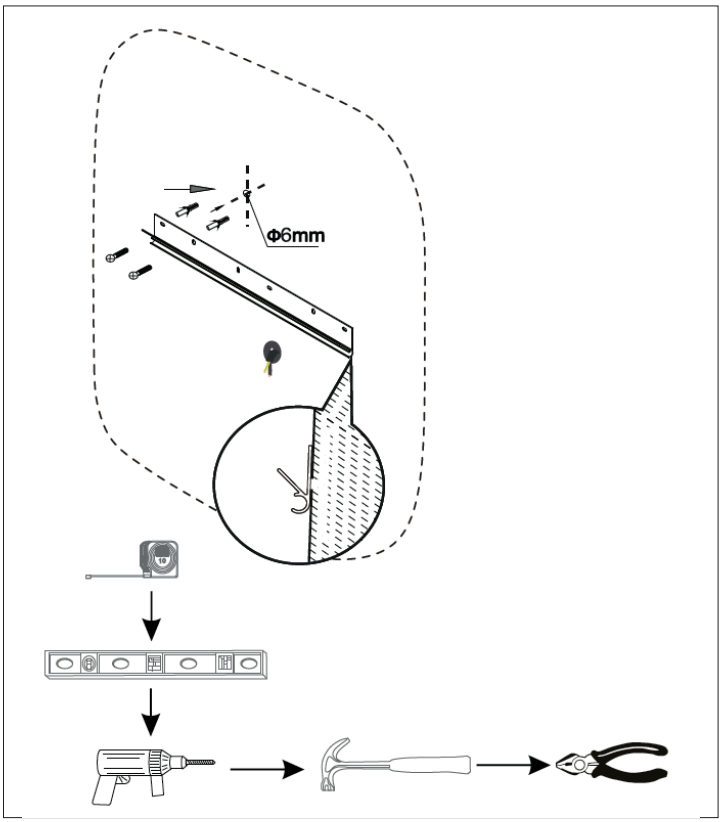

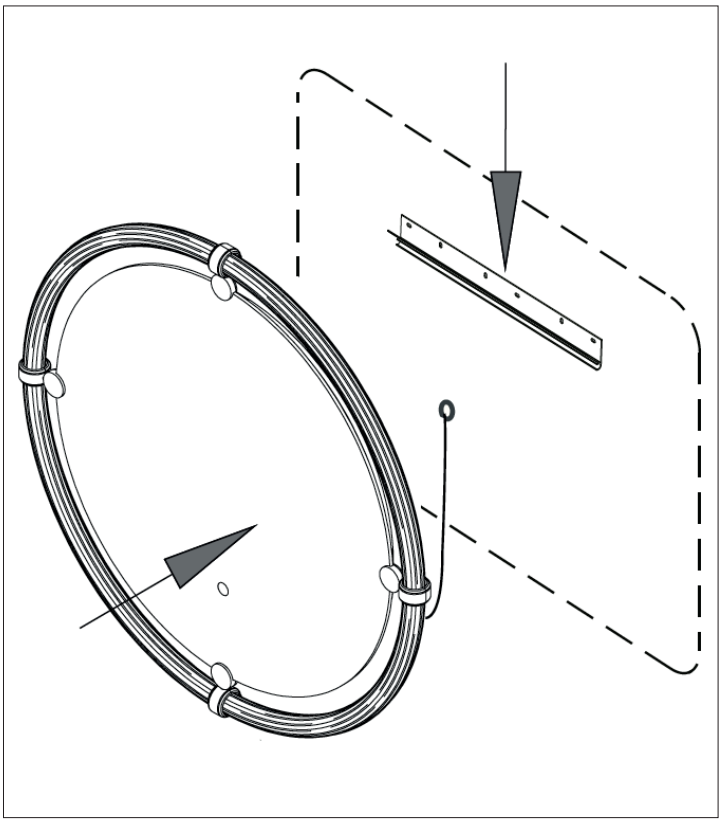

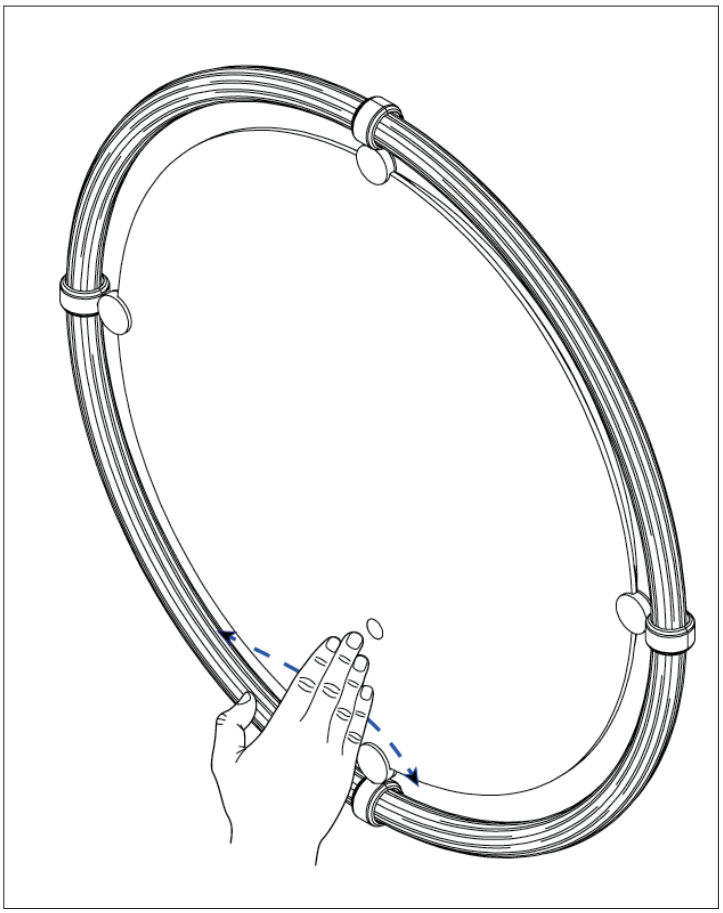

Turning the LED Light On/Off

- To switch the light on or off, wave your hand in front of the sensor on the mirror surface.
- The heated pad operates only when the mirror is illuminated.

Changing the LED Light Colour

- This mirror features tunable LED strips (from cool white to warm white).
- With the lights turned off, hold your hand in front of the sensor until the desired colour is reached.
- The selected colour temperature will remain set until it is changed again.

Adjusting the LED Light Brightness

- This mirror includes adjustable brightness LED strips.
- With the lights turned on, hold your hand in front of the sensor until the desired brightness is reached.
- The brightness level will remain set until it is changed again.

CARE IN USE

1. Please note this fitting has non replaceable parts
2. Always switch off or disconnect from the mains when cleaning the product.
3. We recommend cleaning with a soft dry cloth. Do not use scourers, abrasives or chemical cleaners.
4. Do not allow moisture to come into contact with electrical parts
5. This luminaire should not be disposed of with normal household rubbish. When a replacement is purchased, this luminaire should be
6. returned to the retailer to safely dispose of (WEEE Directive effective July 2006–Waste from Electrical & Electronic Equipment)

This product contains a source of energy efficiency class F